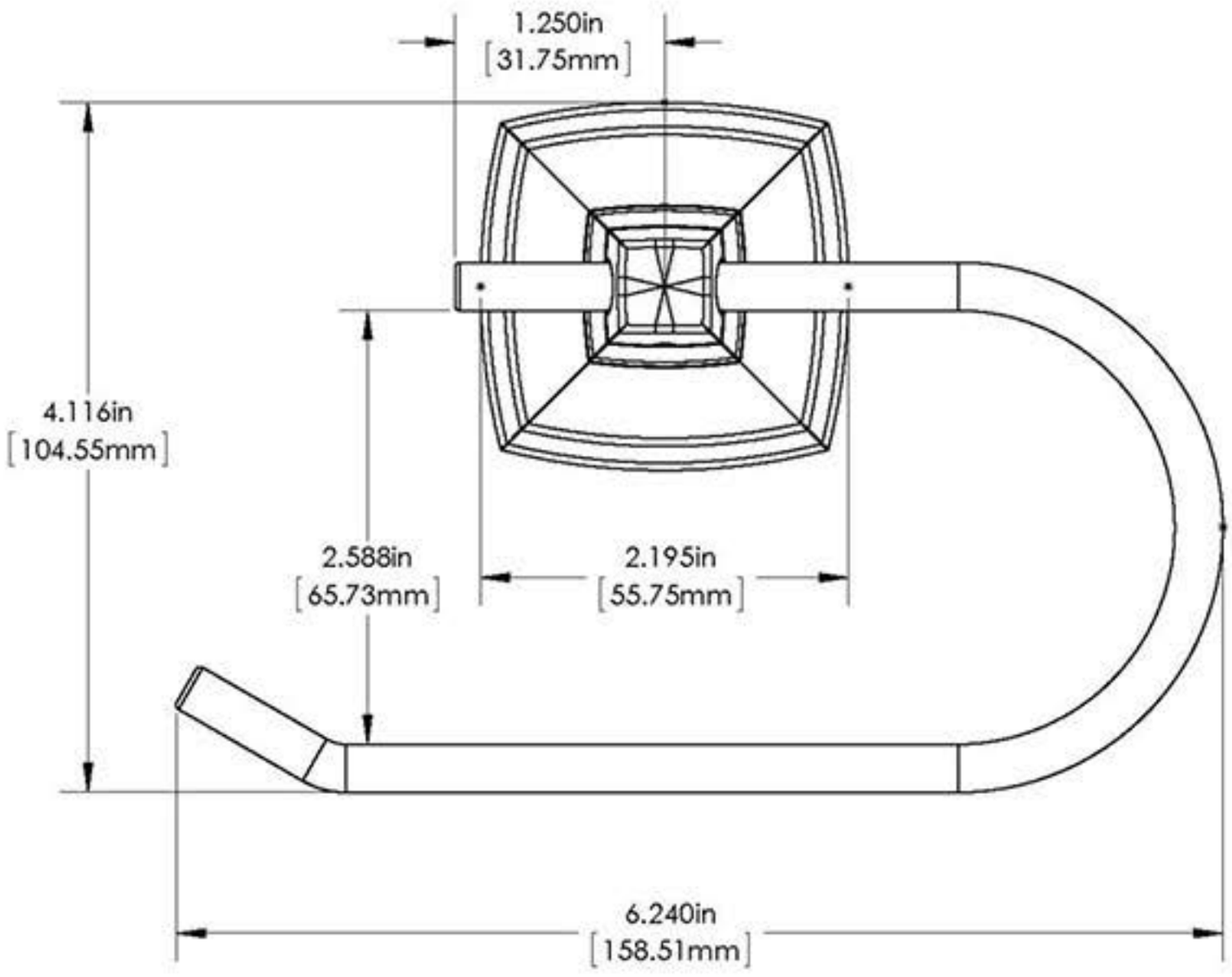
1.250in
[31.75mm]
4.116in
[104.55mm]
2.588in
[65.73mm]
2.195in
[55.75mm]
6.240in
[158.51mm]

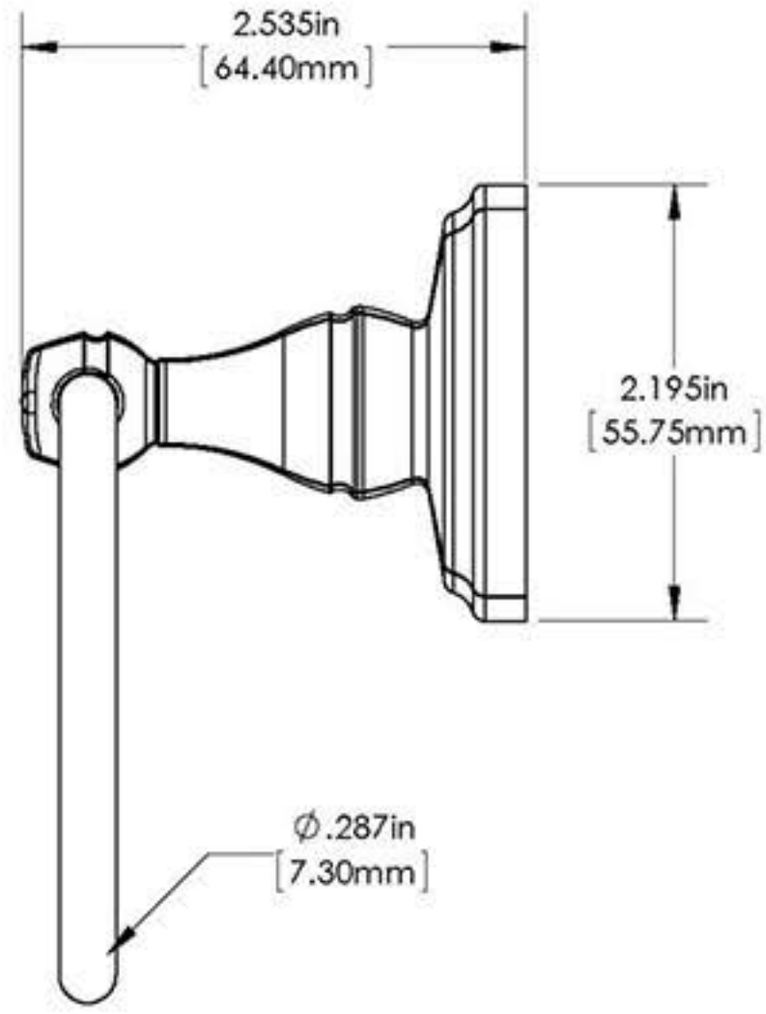
2.535in
[64.40mm]
2.195in
[55.75mm]
Ø.287in
[7.30mm]

SCALE: 1:3